Compact Linear Position Sensors for Standard Applications

Tube- and Profile-Types up to 3 m stroke – LM_S34

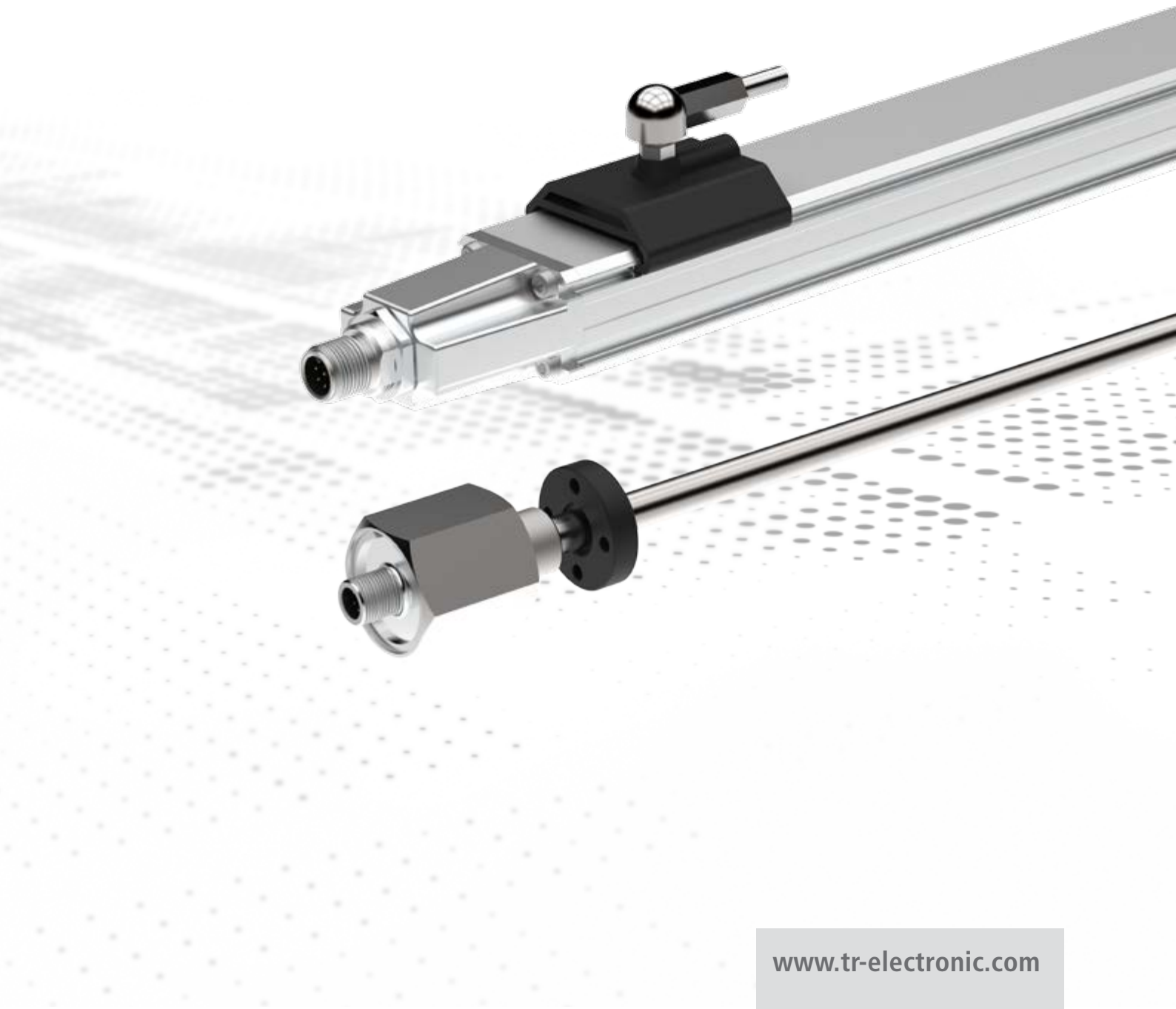

www.tr-electronic.com

Release note

Please note that the information, measure values and tolerances in the drawings are not binding. Subject to Modification in technology and design. They serve only as a means to illustrate the product. Please contact our sales team if you would like a concrete offer and a binding drawing.

All information and data can be found at:
www.tr-electronic.com/s/S020952

Access information even faster:
by scanning the QR code.

PROFINET EtherCAT EtherNet/IP ETHERNET POWERLINK
sercos the automation bus PROFIBUS CANopen DeviceNet
IO-Link SSI Analog

Standard

Linearität ± 0,15 mm (bis 1,5 m FS)
Auflösung typ. 0,01 mm
Messlänge bis 3000 mm

CANopen
IO-Link SSI Analog

CANopen
IO-Link SSI Analog

Advantages

- High level of machine availability: touch-free and wear-free measurement
- No machine initialization after a power failure: Linear absolute measurement
- Easy to install: Clampable, flat profile housing
- Compatible even in restricted space: Compact design
- Simple to connect: economical M12 standard connectors for all interfaces

Additional features

- Optimal price-performance ration for many industrial applications
- Measurement lengths of 0.03 m to 3 m
- A wide range of magnets and magnet slides are available
- Resistant to vibration and fluctuations in temperature

Features

- Resolution: typ 0,01 mm
- Linearity: ±0,15 mm
- Ptrotected against water(up to IP 67)

Profile Housing

- Flat profile
- Can be used with guided magnet slider or unguided block magnets

Tube Housing

- pressure proof stainless steel tube for cylinder integration (300 bar static tested)

Applications

- General positioning in machine construction
- Replacement for existing measuring elements, e.g. wear-prone potentiometers
- Plastic spray machines
- Feed and dress axis

Magnetostriction – functional principle

Magnetostriction technology

The measuring principle is based on a travel time measurement (ultrasonic range). A protecting tube contains a tensioned magnetostrictive wire (waveguide), through which current pulses are transmitted. This generates a circular magnetic field around the wire. A non-contact permanent magnet serves as a position sensor, touching the waveguide with its magnetic field. The two differently aligned magnetic fields meet at the measuring point and trigger a torsion pulse, which moves along the wire in both directions at a constant sound velocity. The time difference between the emission of the torsion pulse and its arrival at the encoder in the sensor head is converted by the measuring electronics into a displacement-proportional signal, which is made available as a digital or analog output signal.
The touch-free and wear-free measuring systems, which operate based on magnetstriction technology, are available in the following versions.
In an aluminium profile housing with externally attached measuring slide or loose magnet, managed by the operator.

Advantages

_ touch-free and low on wear and tear
_ precise and reliable position feedback
_ for attachment to the machine

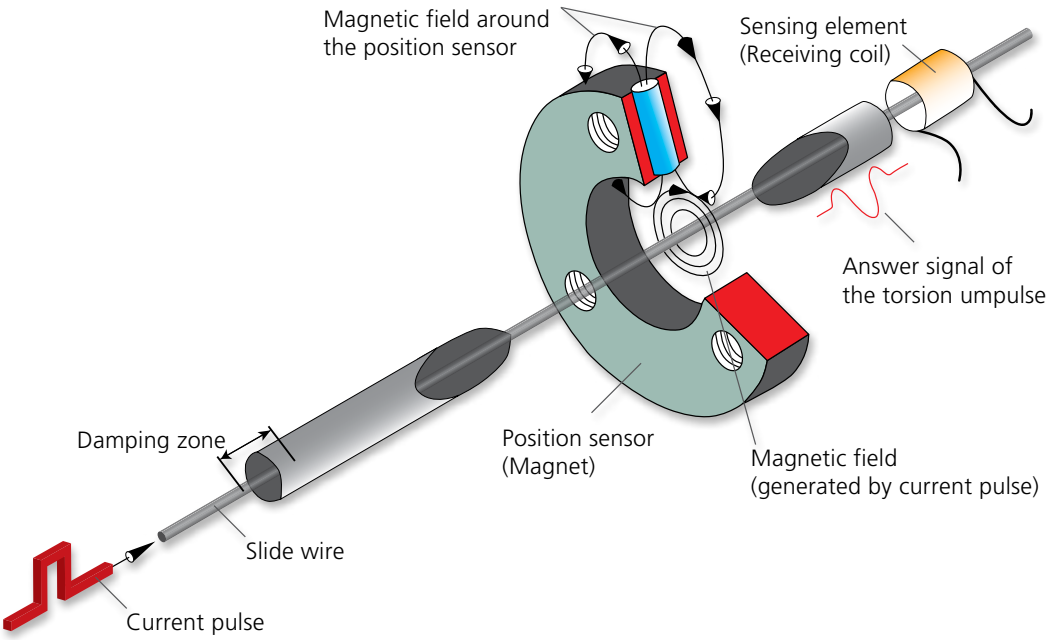

LMRS 34

Analog
SSI
CAN
IO-Link

Advantages

- pressure proof tube housing
- referencing via set input
- measures linear movements
- Wear-free scanning
- for cylinder integration

General Data	
Supply - Supply voltage	24 VDC, -20…+10 %
Measuring length, standard	50 … 3.000 mm in steps
Resolution	0,01 mm
Linearity deviation	± 0,015 % FS (min ± 50 µm)
Reproducibility	± 0,005 % FS (min ± 10 µm)
Environmental conditions	
Relative humidity	98 %, non condensing
Protection class - Standard	IP 67

More information about the devices can be found at www.tr-electronic.com/s/S020951

Dimensional drawing LMRS 34

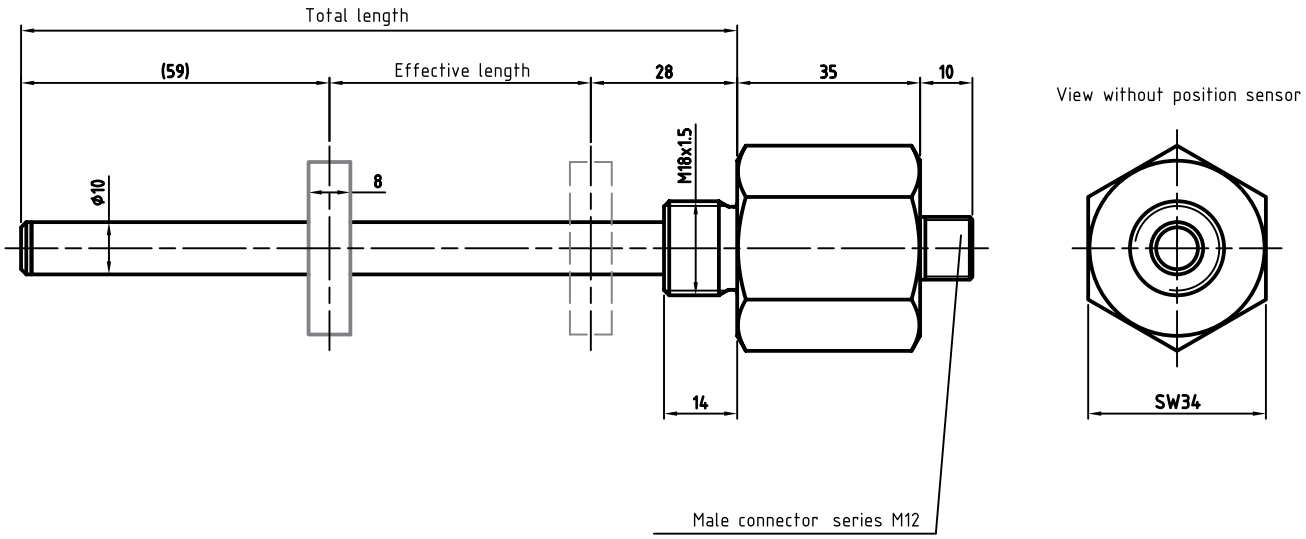

Please ask for specific drawing for your construction work.
Gray: Not included, please order separately.

LMPS 34

Analog
SSI
CAN
IO-Link

Advantages
- Measures linear movement
- Profile housing
- Wear-free scanning
- Compact design

General Data	
Supply - Supply voltage	24 VDC, -20…+10 %
Measuring length, standard	50 … 3.000 mm in steps
Resolution	0,01 mm
Linearity deviation	± 0,015 % FS (min ± 50 µm)
Reproducibility	± 0,005 % FS (min ± 10 µm)
Environmental conditions	
Relative humidity	98 %, non condensing
Protection class - Standard	IP 67

More information about the devices can be found at www.tr-electronic.com/s/S020951

Dimensional drawing LMRS 34

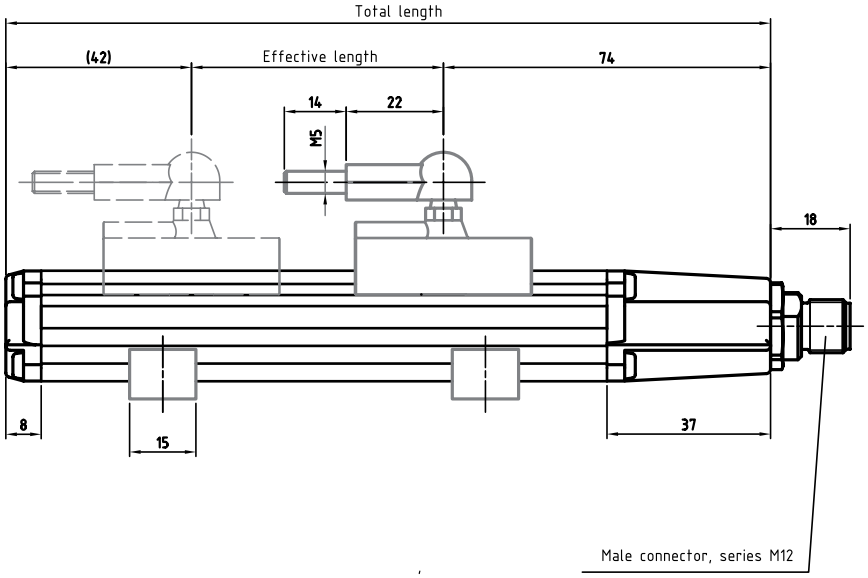

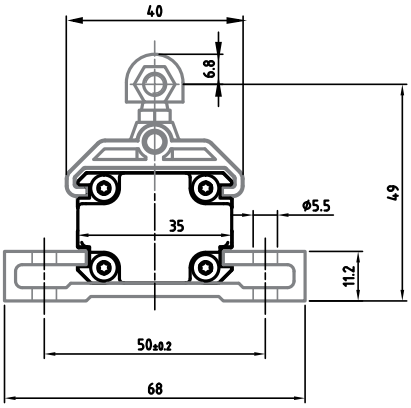

Please ask for specific drawing for your construction work.
Gray: Not included, please order separately.

Interfaces and Options

Analog	
Output range	mechanic measurement length, scaled to 0 … 10 V, 4 … 20 mA
Scaling?	yes, via set input
Connection	M12 × 4 pin

SSI	
Output	absolute position, up to 24 bit
Parameterization	yes, with Software TR-Winprog
Connection	M12 × 8 pin

IO-Link	
Output	Position, speed of max 3 magnets, internal temperature, operation hours counter (resolution: 0,1 h)
Parameterization	yes, with IO-Link configuration tool
Connection	M12 × 4 pin

CANopen	
Output	Position, speed of up to 3 magnets
Parameterization	yes, with CANopen configuration tool
Connection	M12 × 4 pin

How to order: mandatory and optional accessories

specifiy your measurement system	
interface, choose 1 out of	Analog U, Analog I, SSI, CANopen, IO-Link
housing, choose 1 out of	tube, profile
measurement range	50 … 3.000 mm in steps

mandatory parts, please include with your order	
magnet	for different types, see following pages
	all specified data for measurement systems require the use of magnets provided by TR that are compatible with this meausrement system

optional accessories, has to be ordered separately	
suitable for profile housing	clamping brackets
	see following pages for different types

Measurement ranges, damping and dead zones

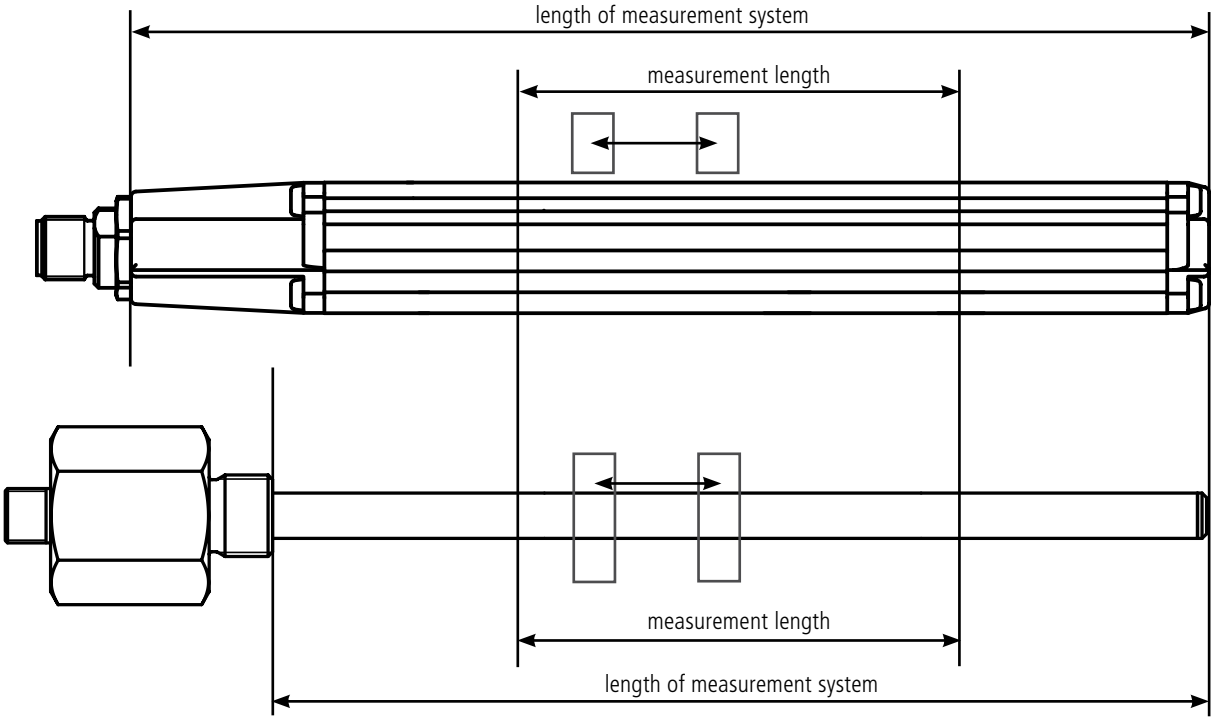

A: zone with limited resolution and reproducibility 5 mm
B, B': dead zones, see drawings
C: minimal distance between 2 magnets, reference is center of magnet.

LM_S 34

Interface	Signal, when magnet is lifted offor in Range B/B' *	Measurement length	C [mm]
Analog U	10 V	0 … 10 V, scaling via set input	-
Analog I	20 mA	4 … 20 mA, scaling via set input	-
SSI	0xFF	24 bit, scaling per software	-
IO-Link	0x7FFFFFFF, reset status bit „Process data valid" acc. to IO-Link specifications	24 bit, scaling setup via bus up to 3 magnets	80 mm
CANopen	0xFF Emergency Telegramm according CANopen specifications	24 bit, scaling setup via bus, up to 3 magnets	80 mm

*valid as well for multi magnet systems in case the recognized number of magnets differs from parametrized number of magnets, resp. if magnets are too close together and thus are detected as one single magnet.

Overview – accessories*
Magnets and spacers

Products

- Block magnets
- Open ring magnets
- Ball-joint arms
- Double clamping

- Please order magnets and clampings separately

*When inquiring about suitable accessories, please always specify the encoder.

Type	Order number	Product	Scale drawing
Block-Magnet T1-S3818 for LM**P**S34 and LM**R**S34	49155015		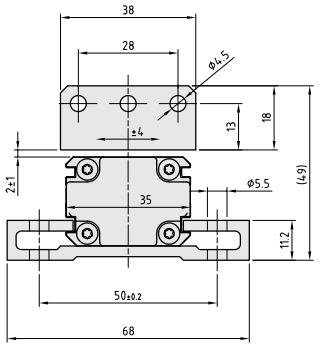
Block-Magnet T1-S5520 for LM**P**S34 and LM**R**S34	49155009		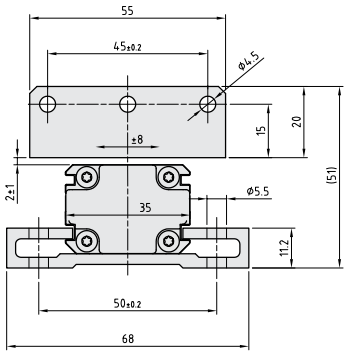
Slider with Ball joint arm for LM**P**S34 Accessory available: Extension rod 360 mm	85917050 49917022		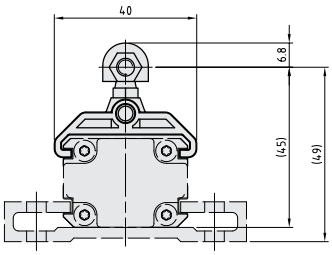

Type	Order number	Product	Scale drawing
Double clamping – aluminium for LM**P**S34	single part: 49917001 2 clamps, 4 screws M5 × 20 as set: 85917002		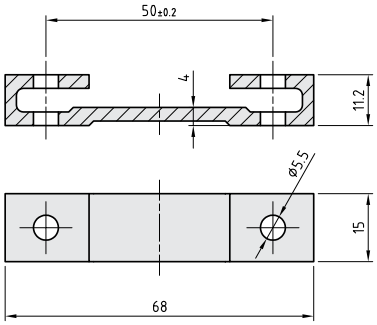
Double clamping – stainless steel, for vertical assembly for LM**P**S34	49917057		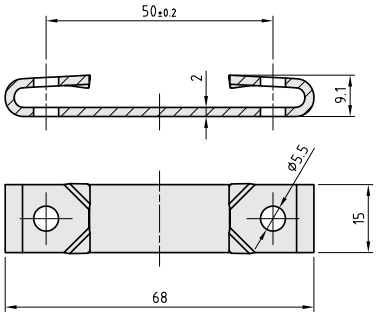
Distance mounting bracket for double clamping bracket	49917081 (X = 05 mm) 49917082 (X = 10 mm) 49917083 (X = 12 mm)		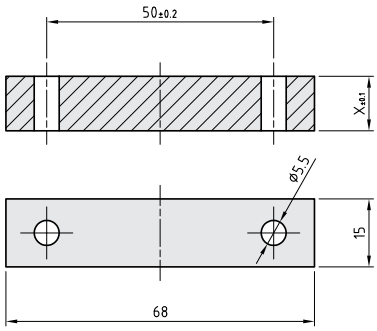
Ring magnet 20 mm T4M20 for LM**R**S34	49155026		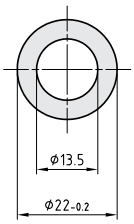

Type	Order number	Product	Scale drawing
Ring magnet 22 mm T4M22 for LM**R**S34	49155005		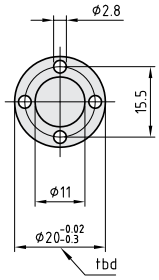
Ring magnet 33 mm T4M33 for LM**R**S34	49155016		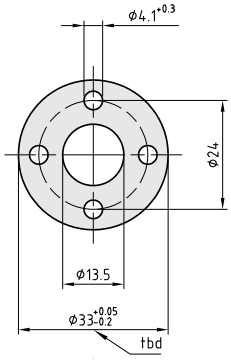
Float K4-M51 for LM**R**S34	49915080		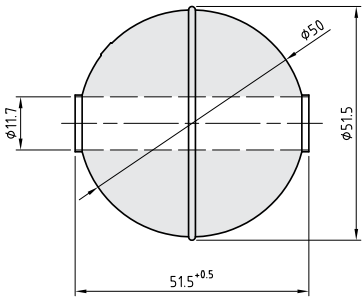
Open ring magnet T4U3820 for LM**R**S34	49155003		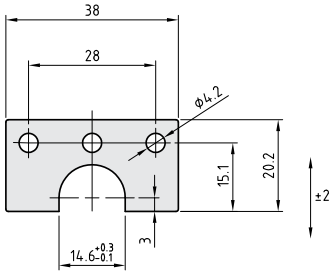

Further accessories can be found in our main TR-catalog.

TR-Electronic – your partner in automation

Rotary encoders

Absolute encoder, incremental rotary encoder, wire-actuated encoder

Rotary encoders with optical and magnetic scanning function register the precise position in a wide variety of applications and industries.
In medical engineering, miniature versions ensure correct positioning while SIL3-approved absolute rotary encoders provide the necessary safety. We offer not only high-quality rotary encoders (from Ø 22 to 160 mm) for almost any application but also comprehensive accessories.

Linear encoders

Linear absolute measuring systems, laser displacement measurement

Linear encoders register linear motions in machines, tools and systems according to specific requirements using different technologies.
Linear encoders allow measuring distances of max. 20 m almost without any wear. This value is max. 240 m for laser measuring systems. Machines and systems can be precisely controlled to reach their desired positions.

Motion

Servo drives, compact drives, process drives

Intelligent encoTRive drives are available with the current field bus systems, such as PROFIBUS, PROFINET and CANopen, within a power range of up to 300 watts. The drives are configured to meet customer requirements and can be freely combined with precision gear, holding brake and I/O.
Values of up to 4,350 rpm and powerful 200 Nm are available to cope with demanding applications.

Components

Industrial PC, field bus I/O, PLC, HMI controller

Industrial PCs are available in numerous variants and offer customized calculation power for PC-assisted automation. Programmable logic controllers (PLC) are the traditional means for automation. HMI controllers establish the interface to the user. Field bus nodes, I/O modules and cam controllers complete the range of automation components.

Automation

Consulting and implementation for new machines and retrofit

You want to set up a largely automated new machine or retrofit and modernize your existing machine with automation systems? Then you just need our extensive expert knowledge and the more than 20 years of our experience.

Unidor

Blanking and forming, systems, controls and sensors

Trendsetting blanking and forming technology for more than 30 years. We are your reliable partner in the world of blanking and pressing and can prove this with thousands of machines which we have successfully installed all over the world. Sensors, controls and systems ensure optimal results in machines, tools and retrofit projects.

photo background: ©kras99 / fotolia.com

Deutschland

TR-Electronic GmbH

Eglishalde 6
D-78647 Trossingen
Germany

Tel.: +49/7425 228-0
Fax: +49/7425 228-33

info@tr-electronic.de
www.tr-electronic.de

Technischer Innendienst TR-Electronic

Tessari Claudia
Tel.: +49/7425 228-212
claudia.tessari@tr-electronic.de

Uwe Schmissrauter
Tel.: +49/7425 228-207
uwe.schmissrauter@tr-electronic.de

Bastian Seufert
Tel.: +49/7425 228-209
bastian.seufert@tr-electronic.de

Vertrieb Außendienst

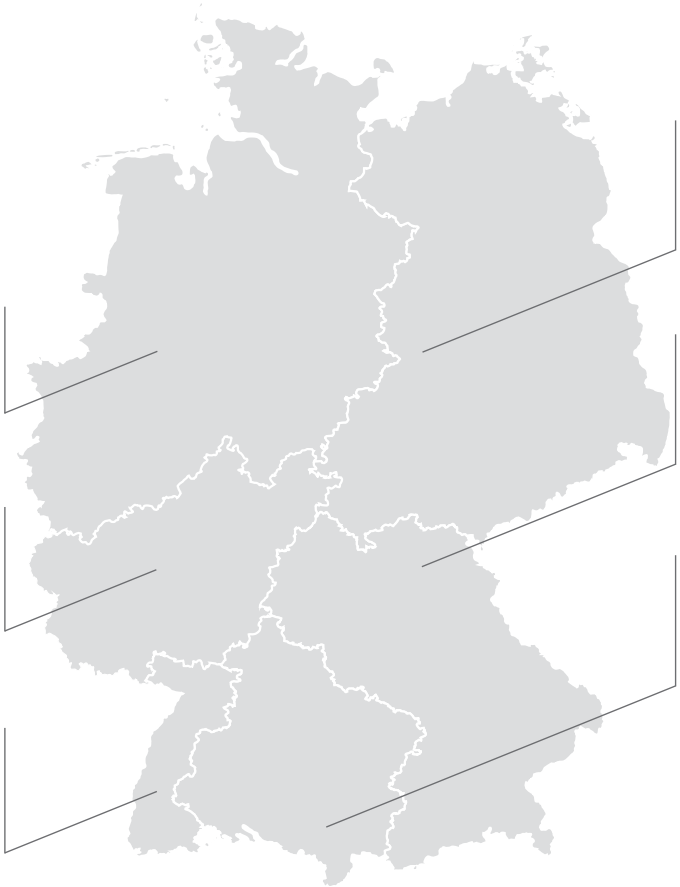

Key Account
Heiko Flentje
Tel.: +49/7454 80 12
Fax +49/7454 87 28 4
heiko.flentje@tr-electronic.de

Guido Siebert
Tel.: +49/7425 228-502
guido.siebert@tr-electronic.de

Andreas Bäuerle
Tel.: +49/7425 228-503
Mobil +49/171 8865584
andreas.baeuerle@tr-electronic.de

Kay Vogt
Tel.: +49/7805 9165684
Mobil +49/172 6758851
kay.vogt@tr-electronic.de

Dr. Dietrich Thoß
Tel.: +49/3661 671104
Mobil +49/172 9242376
dietrich.thoss@tr-electronic.de

Jörg Neugirg
Tel.: +49/7425 228-501
Mobil +49/172 9951710
joerg.neugirg@tr-electronic.de

Mathias Walz
Tel.: +49/7425 228-504
Mobil +49/171 8719620
mathias.walz@tr-electronic.de

Mexico
TR Electronic
P.O. Box 2543, Station B
CA-London, Ontario Canada
N6A 4G9
Tel.: +1/519-452 1999
Fax: +1/519-452 1177
customercare@trelectronic.com
www.trelectronic.com

Netherlands
TR-Electronic Benelux
Dorpstraat 18F
NL-5386AM Geffen
Tel.: +31/73 844 9600
Mobil: +31/6383 28 303
rene.verbruggen@tr-electronic.nl
www.tr-electronic.nl

Norway
TR Electronic Norway AS
Fusdal Terrasse 3
N-1387 Asker
Tel.: +46 708 696 533
Fax: +46 875 676 80
info@trelectronic.se
www.trelectronic.se

Peru
Grupo C+Tecnologia
Rua dos Caetés 601
CEP-05419-000
BR-Perdizes - São Paulo - SP
Tel.: +55/11-2168 6554
Fax: +55/11-2168 6555
info@ctecnologia.com.br
www.ctecnologia.com.br

Poland
Stoltronic-Polska Sp.z o.o. Sp.k.
ul. Dąbrowskiego 238
P-93-231 Łódź
Tel.: +48/42 649 12 15
Fax: +48/42 649 11 08
stoltronic@stoltronic.pl
www.stoltronic.pl

Republic of Korea
MS Intech Co., Ltd.
B-306 SK Twintech Tower
345-9 Gasan-dong/
Geumcheon-gu
KR-08589 Seoul
Tel.: +82/2-334 0577
Fax: +82/2-862 1591
sales@msintech.com
www.msintech.com

Russia
Sensotec LLC
Kievskoye highway 22 km
(Moskovskiy settlement)
housing estate 4, building 5,
office 505E
RU-108811 Moscow
Tel.: +7/495 181-56-67
Fax: +7/495 181-56-67
info@sensotek.ru
www.sensotek.ru

Saudi-Arabia
Business Tribune Company Ltd.
4237 Ad Danah
King Abdulaziz Road
SA-32437–6887 Ad Dammam
Tel.: +966/3-832 72-17
Fax: +966/3-832 72-41
waleed@bustribune.com.sa
www.bustribune.com

Singapore
Globaltec Electronics
(Far East) Pte. Ltd.
50 Bukit Batok Street 23
#06-27 Midview Building
SG-659578 Singapore
Tel.: +65/6267 9188
Fax: +65/6267 8011
janice@globaltec.com.sg
www.globaltec.com.sg

Slovenia
S.M.M. d.o.o.
Jaskova 18
SI-2001 Maribor
Tel.: +386/2450 2300
Fax: +386/2450 2302
info@smm.si
www.smm.si

South Africa
Angstrom Engineering (Pty) Ltd.
Sybrand van Niekerk
Business Park Meyerton
19 Tom Muller Road
ZA-1960 Meyerton
Tel.: +27/362 0300
info@angstromeng.co.za
www.angstromeng.co.za

Spain, Portugal
Intertronic Internacional, SL
C/Johannes Gutenberg, 4 y 6
Parque Tecnológico Paterna
ES-46980 Valencia
Tel.: +34/963 758 050
Fax: +34/963 751 022
info@intertronic.es
www.intertronic.es

Sweden
TR Electronic Sweden AB
Djupdalsvägen 10
SE-192 51 Sollentuna
Tel.: +46/8-756 72 20
Fax: +46/8-756 76-80
mailbox@trelectronic.se
www.trelectronic.se

Switzerland
TR-Electronic SA
14, Ch. Pré-Fleuri
CH-1228 Plan-les-Ouates/Genève
Tel.: +41/22-7 94 21 50
Fax: +41/22-7 94 21 71
info@tr-electronic.ch
www.tr-electronic.ch

Taiwan
TR-Electronic (Beijing) CO., LTD.
Room 717 / 718, Building A2
Electronic City Science Park
Jiu Xian Qiao Dong Road No. 9
Chaoyang District
CN-100027 Beijing, P.R. China
Tel.: +86/10 - 582 386 55
Fax: +86/10 - 582 372 10
lu.yu@tr-electronic.de
www.tr-electronic.com.cn

Thailand
T+R Electronic (Thailand) Co., Ltd.
120/62 Moo 8 Bang Sare
TH-Sattahip, Chonburi 20250
Tel.:+66/38 737 487
Fax:+66/38 737 171
trthailand@trelectronic.co.th
www.trelectronic.co.th

Turkey
ÜNİVERSA İÇ ve DIŞ TİC. MAK.
SAN. LTD. ŞTİ.
Cemal Gürsel Caddesi No: 11/7
TR-35600 Karşıyaka-IZMIR
Tel.: +90/232 382 23 14
Fax: +90/232 382 23 24
info@universa.com.tr
www.universa.com.tr

USA (TR-Electronic)
TR Electronic
200 East Big Beaver Road
Suite 164
US-Troy, MI 48083
Tel.: +1/248-244-2280
Fax: +1/248-244-2283
customercare@trelectronic.com
www.trelectronic.com

USA (TRsystems)
TRS Fieldbus Systems, Inc.
666 Baldwin Court
US-Birmingham, MI 48009
Tel.: +1/586 826-9696
Fax: +1/586 826-9697
support@trs-fieldbus.com
www.trs-fieldbus.com

07.01.2019

TR-Electronic GmbH
Eglishalde 6
D - 78647 Trossingen

Tel. +49 7425 228 - 0
Fax +49 7425 228 - 33

info@tr-electronic.de
www.tr-electronic.de

Last update: 06/2019
68-105-130 · TR-V-PR-GB-0036-00